RESEARCH ARTICLE

Sustainable Education and Digital Transformation
Volume 2, Issue 1, 2027, e45143
https://doi.org/10.33902/SEDT.202645143

Assessing the effect of metacognitive awareness and student anxiety on mathematics achievement: The moderating role of classroom management

Emmanuel Nteaka Bimbim[1], Francis Ohene Boateng[2] and Ebenezer Appiagyei[3]

[1]Akenten Appiah Menka University of Skills Training and Entrepreneurial Development, Ghana (ORCID: 0009-0001-7400-5512)
[2]Akenten Appiah Menka University of Skills Training and Entrepreneurial Development, Ghana (ORCID: 0000-0003-0197-7385)
[3]Akenten Appiah Menka University of Skills Training and Entrepreneurial Development, Ghana (ORCID: 0000-0002-7290-2586)

Corresponding Author: Emmanuel Nteaka Bimbim, nteakaeb@gmail.com

Submitted: 21 April 2026 Revised: 10 July 2026 Accepted: 11 November 2026 Published online: 26 November 2026

Abstract

The current study investigated the effect of students' metacognitive awareness and mathematics anxiety on mathematics achievement, as well as the moderating role of classroom management in the relationship between metacognitive awareness and mathematics achievement. The study contributes to the growing body of literature in mathematics education and educational psychology by examining cognitive, emotional, and classroom-related factors associated with students' academic performance. A quantitative approach employing a descriptive survey design was adopted. A sample of 309 respondents was selected using proportionate stratified sampling. Data were collected through a structured questionnaire and analyzed using structural equation modeling. The measures demonstrated acceptable internal consistency and discriminant validity. The findings revealed a significant negative association between mathematics anxiety and mathematics achievement. Metacognitive awareness and classroom management showed positive associations with mathematics achievement, although these relationships were not statistically significant. The interaction between classroom management and metacognitive awareness was negative but not statistically significant, providing insufficient evidence of a moderating effect. The study offers insights for mathematics educators, curriculum developers, and educational practitioners into the relationships among metacognitive awareness, mathematics anxiety, classroom management, and mathematics achievement.

Keywords: Achievement; Classroom management; Mathematics; Metacognitive awareness; Students' anxiety

1. Introduction

Concerns about students' performance in mathematics are widely acknowledged as a pressing educational issue across the globe, affecting both developing and developed nations. Even in countries with well-established educational systems, such as Australia and the United States, mathematics performance continues to be a source of concern among educators, policymakers, and researchers (Thomson et al., 2017). Mathematics plays a foundational role not only in academic success but also in the broader development of logical thinking, problem-solving, and decision-making skills that are vital for everyday life and professional advancement. The advancement and mastery of mathematics are particularly important, as the discipline enables individuals to analyze, predict, and manage complex systems and processes. In contrast, mathematics anxiety is a widespread psychological barrier that hinders student engagement and performance in the subject. It is commonly described as a set of negative emotional responses such as fear, tension, and apprehension towards mathematical tasks or symbols (Cipora et al., 2022). Students experiencing high levels of math anxiety often develop avoidance behaviors, steering clear of math-related subjects, tasks, or careers. Metacognition becomes especially important when students are faced with complex cognitive tasks such as mathematical problem-solving (Jaafar & Ayub, 2010). Kohen and Nitzan (2022) emphasized that persistent avoidance of mathematics due to anxiety can significantly reduce students' chances of qualifying for STEM programs, thereby narrowing their future academic and professional opportunities.

Mathematics anxiety is a significant factor contributing to avoidance behaviors among students. When students avoid mathematics, they are less likely to develop competence, receive adequate exposure, or engage meaningfully with mathematical concepts ultimately leading to poor

Copyright © 2026 by the author(s). This is an **open-access** article distributed under the terms of the Creative Commons Attribution 4.0 International License (CC BY 4.0).

academic performance (Suren & Kandemir, 2020). A recent study by Koomson et al. (2024) reported that mathematics anxiety remains notably high among Junior High School (JHS) students in Ghana. Similarly, Essuman et al. (2021) found a high level of mathematics anxiety among students. These findings align with those of Ferdous (2012), who observed that high levels of mathematics anxiety during teaching and learning activities intensify learners' anxiety across all mathematical domains.

A study conducted among students at Kinbu Senior High/Technical School in Accra and HermannGmeiner SOS Junior High School in Tema found that approximately 47.5% of 200 students surveyed experienced severe mathematics anxiety, with anxiety levels ranging between 75% and 95% (Bruce, 2016). The prevalence of mathematics anxiety among junior high (JHS) and senior high (SHS) students is confirmed by these data. According to a study done in the Sagnarigu Municipality, there was a significant negative correlation ($r = -.85$) between math anxiety and academic achievement among SHS students. This suggests that math performance is closely linked to higher anxiety levels (Bornaa et al., 2023).

Despite advancements in educational practices and the integration of technology, many students continue to face challenges in learning mathematics, often reflected in poor academic performance and heightened anxiety in Ghana specifically Agona SHS. The study is supported by Aboagye-Agbi et al. (2025), who condeucted a study on mathematical anxiety among senior high school (SHS) students in Ghana's Agona West municipality. The data demonstrated that mathematical anxiety occurs among SHS students, with 64% reporting high anxiety and only 2% reporting low anxiety. However, 34% of people have moderate mathematics anxiety. Similarly, a study conducted in the Sagnarigu Municipality found a substantial negative connection ($r = -.85$) between math anxiety and academic achievement among senior high school pupils. This suggests that math performance is closely linked to higher anxiety levels (Bornaa et al., 2023).

According to Ristanto et al. (2019), students frequently struggle with the metacognitive ability of planning, which includes prioritizing tasks and creating learning goals. This indicates a general lack of competency in employing metacognitive methods to successfully govern their learning processes. While previous research explored the influence of mathematics anxiety and metacognitive awareness on student achievement. The present study focuses on the lack of moderating role of classroom management on the relationship between metacognitive awareness and mathematics achievement. Addressing this gap, the current study seeks to investigate how classroom management moderates the link between metacognitive awareness and mathematics achievement. Traditional instructional methods frequently overlook individual cognitive processes that affect learning, relying instead on rote learning and uniform strategies that fail to accommodate students' diverse needs and learning preferences. A further concern is the persistence of conventional beliefs about mathematics among pre-service teachers, which may contribute to ineffective teaching practices. These problems highlight how crucial it is to prepare aspiring teachers in both mathematical subject, cognitive and pedagogical techniques that promote student learning and lower anxiety, such as classroom management and metacognition.

This study aligns with the broader scope of research in mathematics education and educational psychology by examining how cognitive and emotional factors interact within classroom environments to influence students' academic achievement. In recent years, increasing attention has been given to students' metacognitive development, anxiety management, and classroom experiences as important determinants of mathematics learning outcomes. By integrating metacognitive awareness, mathematics anxiety, and classroom management into a single framework, the study contributes to ongoing discussions on effective teaching and learning practices in mathematics education.

This study sought to examine the relationships among students' metacognitive awareness, mathematics anxiety, and mathematics achievement, as well as the moderating role of classroom management. Specifically, it examined the relationship between metacognitive awareness and mathematics achievement, the relationship between metacognitive awareness and mathematics anxiety, and the relationship between mathematics anxiety and mathematics achievement. It also

investigated whether classroom management moderates the relationship between metacognitive awareness and mathematics achievement. Accordingly, the study addressed the following research questions:

RQ 1) What is the relationship between students' metacognitive awareness and mathematics achievement?

RQ 2) What is the relationship between students' metacognitive awareness and mathematics anxiety?

RQ 3) What is the relationship between students' mathematics anxiety and mathematics achievement?

RQ 4) Does classroom management moderate the relationship between students' metacognitive awareness and mathematics achievement?

2. Background

2.1. Social Cognitive Theory

The social environment has a significant influence on how people learn and behave, according to social cognitive theory. Peers are also important in this process since they set an example for behavior, use social rewards or penalties, and serve as benchmarks for evaluating one's own competency. Behavior is shaped by the interaction between efficacy expectations individuals' belief in their ability to produce a specific outcome and outcome expectations the belief that certain actions will lead to specific results (Bandura, 1977b). A core principle of this theory is the role of self-regulation in driving behavioral change. Self-regulation consists of three key components: self-monitoring, self-judgment, and self-evaluation. According to Bandura's Social Cognitive Theory, human beings are capable of experiencing emotions, engaging in thought processes, and learning from their environment (Nabavi, 2012). These interactions between personal, behavioral, and environmental factors shape an individual's future beliefs and actions (Brennan, 2017).

2.2. Metacognitive Awareness Theory

The cognitive learning theory places a strong emphasis on how both internal and external factors impact the way that people think. Flavell (1976) coined the word "metacognition," which describes a person's awareness and control over their own cognitive processes. He referred to a person's capacity to control and keep track of the input, storing, searching, and retrieval of information from memory as meta-memory A person's awareness of their cognitive processes, such as their capacity to organize, track, and assess their learning, is commonly referred to as metacognition (Tuncer & Dogan, 2016). It is a major factor in determining academic achievement and is essential to problem-solving and the learning process (Bedel, 2012). According to Tamsyani (2016), students who demonstrate higher levels of metacognitive awareness are better able to design, monitor, evaluate, and reflect on their learning processes, thereby enhancing their academic performance.

2.3. Control-Value Theory

The Control-Value Theory (CVT) of Achievement Emotions, described by Pekrun and Perry (2014) in their chapter in the International Handbook of Emotions in Education, proposes that achievement emotions (such as joy, anger, and boredom) are caused by a student's cognitive appraisals of control over an achievement activity or outcome, as well as the perceived value of the activity or outcome. High value and control foster positive emotions like pride and fulfillment, whereas low value or perceived lack of control fosters negative emotions like boredom, shame, or anxiety.

3. Conceptual Framework

Figure 1 illustrates the conceptual framework for this study.

Figure 1
Framework of the Study

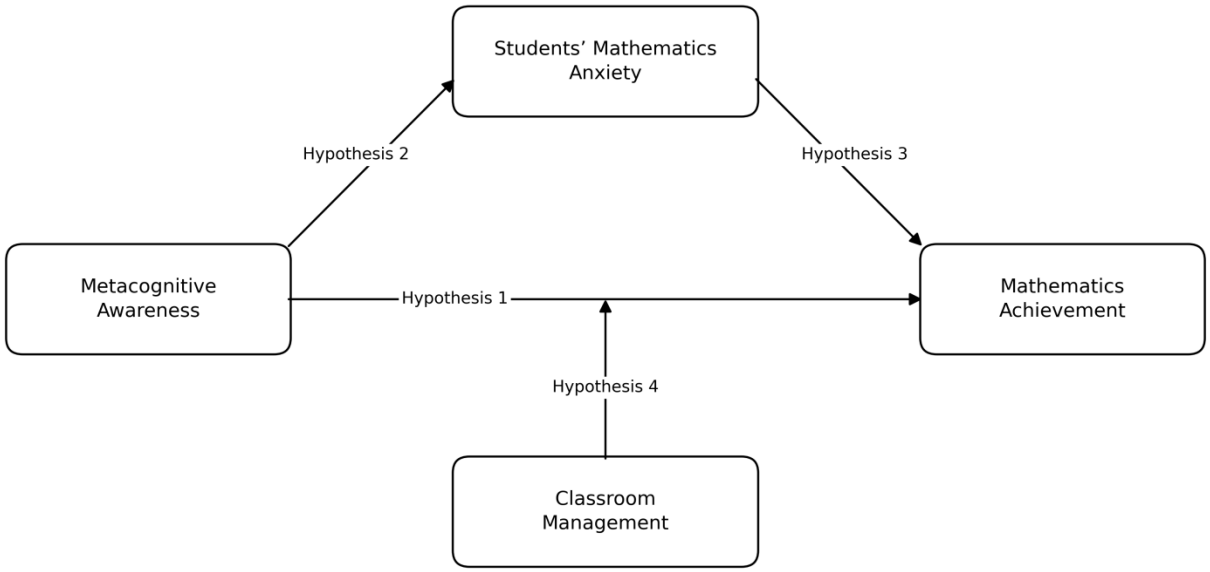

3.1. Meta-cognitive Awareness on Math Achievement

Metacognition refers to the awareness and understanding of one's own thought processes. It is often described as "thinking about one's own thinking," which encompasses how individuals plan, monitor, control, and evaluate their own learning, comprehension, and problem-solving—particularly in domains like mathematics. According to Conley (2014), metacognitive awareness includes all learning behaviors and processes that involve reflection, intentional strategy selection, and mental processing, ultimately enhancing a student's ability to learn more effectively. Metacognitive strategies such as planning, monitoring, and evaluating are essential for success in science and mathematics education. Cook et al. (2013) found that students who plan their problemsolving approach before beginning a task tend to achieve better results than those who do not. Planning involves setting goals, outlining a strategy, and identifying the steps needed to achieve those goals. Monitoring refers to assessing one's understanding, tracking progress toward goals, and recognizing when adjustments are necessary. Self-regulation: Metacognitive regulation involves an individual's capacity to manage their own learning activities and emotional responses. It encompasses elements such as maintaining motivation, exercising self-discipline, and sustaining concentration and active involvement in learning tasks. According to Wang (2019), providing students with explicit instruction in metacognitive strategies significantly enhances their ability to engage in tasks such as program design. This type of instruction supports the development of critical skills like planning, monitoring, and evaluating, ultimately fostering independent and selfdirected learning. Metacognitive awareness particularly declarative knowledge has been recognized as a significant contributor to undergraduate students' success in mathematics (Roick & Ringeisen, 2018). Radmehr and Drake (2020) highlight the importance of metacognitive knowledge, which includes declarative, procedural, and conditional components, in managing cognitive processes effectively, especially during mathematical problem-solving. Schofield (2012) emphasized that effective learning depends heavily on the development of metacognitive capabilities. To help students succeed in STEM disciplines, it is essential that educators integrate metacognitive strategies into their instruction.

3.2. Metacognitive Awareness on Student Mathematics Anxiety

Research has demonstrated that high levels of metacognition enhance student engagement in mathematical activities, especially in tasks that involve problem-solving (Jacobse & Harskamp, 2012). Advanced metacognitive skills also support the deeper acquisition of declarative, procedural, and conditional knowledge key components for effective mathematics learning (Aydın

& Ubuz, 2010). Furthermore, strong metacognitive abilities are positively associated with better performance on math-related tasks (Desoete & De Craene, 2019). Studies also indicate that students experiencing high levels of test anxiety often show reduced metacognitive awareness and regulation (Silaj et al., 2021). Those who struggle in mathematics are more prone to test anxiety and typically exhibit limited awareness and control over their cognitive processes (Devine et al., 2012; Pennequin et al., 2010).

3.3. Student Anxiety and Mathematics Achievement (H3)

Mathematics anxiety is described as a sense of tension, worry, or fear that negatively affects one's ability to perform in mathematics (Ashcraft, 2002). Studies have indicated that this type of anxiety can be influenced by previous interactions with teachers, the learning environment, and parental attitudes (Fitzgerald, 1997). These studies also reveal that students who have a positive mindset towards mathematics and perform well in the subject tend to experience lower levels of anxiety, while math anxiety tends to rise as children grow older. Math anxiety deeply affects those who experience it, and research consistently shows a negative correlation between math anxiety and academic achievement. Students who fear mathematics intensely often attain lower academic results (Khatoon & Inat, 2017). Math can evoke unpleasant feelings in certain students, such as dread of failing. Their performance suffers as a result of math anxiety (Pan et al., 2020).

3.4. Moderating Effect of Classroom Management on the Relationship between Metacognitive Awareness and Math Achievement (H4)

Collaborating with others improves communication, problem-solving abilities, and mathematical conceptual comprehension (Olaya & González-González, 2020). In addition to maintaining student engagement, an efficient management strategy fosters cooperation, good attitudes, and differentiated instruction all of which enhance mathematical competency (Asare, Welcome, & Arthur, 2024). Effective teaching, past knowledge, practice and perseverance, instructional resources, a supportive environment, and a growth attitude are additional aspects that contribute to mathematical accomplishment (Rayner & Papakonstantinou, 2018). Strong classroom management establishes clear expectations, sets up structured routines, and ensures an organized classroom environment, keeping students motivated to teach (Asare, Welcome, & Arthur, 2024). Drew (2020) noted that metacognitive strategies integrated into classroom practices, such as self-reflection, modeling, peer collaboration, think-alouds, and journaling, further enhance learning outcomes. At the high school level, Nisar et al. (2019) reported a strong positive correlation between teachers' classroom management abilities and students' academic success. Supporting this, the primary goal of classroom management is to establish a productive learning environment by minimizing negative behaviors and reinforcing positive ones. This is particularly important in challenging classroom contexts where misbehavior and lack of cooperation are common (Hochweber et al., 2014). Instructional or teaching skills encompass a teacher's capacity to effectively manage the classroom and deliver instruction tailored to the varied needs and backgrounds of students (Incik, 2020). This perspective is further supported by Bakar (2018), who investigated the relationship between vocational students' academic performance and teacher professionalism defined by pedagogical, social, professional, and personal competencies and found a strong positive correlation.

4. Method

4.1. Research Design and Approach

The study adopted a quantitative approach using a descriptive survey design within a positivist research paradigm. It examined the relationships among pre-service teachers' metacognitive awareness, mathematics anxiety, and mathematics achievement, as well as the moderating role of classroom management in the relationship between metacognitive awareness and mathematics achievement. Pre-service teachers were selected because they are developing the pedagogical knowledge and classroom management skills needed for their future teaching practice.

Understanding their metacognitive awareness and mathematics anxiety may inform teacher education practices that support their learning and professional preparation.

The study population comprised 1,350 students, from whom 309 participants were selected through proportionate stratified sampling. The sample was allocated proportionately across the strata, and participants within each stratum were selected using simple random sampling. Table 1 summarizes the demographic characteristics of the participants.

Table 1
Demographic Characteristics of the Participants

Demographics	*Frequency*	*Percentage*
Gender		
Male	201	65.05
Female	108	34.95
Age		
16-20	59	19.10
21-25	88	28.48
26-30	95	30.74
31 and Above	67	21.68
Level		
100	65	21.11
200	69	22.22
300	73	23.70
400	102	32.97

4.2. Data Collection

Data were collected using structured questionnaires measuring students' metacognitive awareness, mathematics anxiety, classroom management, and mathematics achievement. The instruments were adapted from validated previous studies and measured on a Likert scale. Prior to the main analysis, the reliability of the scales was assessed using Cronbach's alpha in SPSS version 23. According to Pomegbe et al. (2020), Cronbach's alpha values of 0.70 or above indicate acceptable reliability. The results showed acceptable internal consistency for all constructs: metacognitive awareness (α = .797), student mathematics anxiety (α = .851), classroom management (α = .891), and mathematics achievement (α = .876).

4.3. Data Analysis

The data were analyzed using IBM SPSS version 23 and AMOS version 23. Descriptive statistics were used to analyze demographic information. Exploratory Factor Analysis (EFA) was conducted to examine factor structure and sampling adequacy, while Confirmatory Factor Analysis (CFA) was employed to validate the measurement model. Structural Equation Modeling (SEM) was further used to test the hypothesized relationships among the study variables. Model fitness was assessed using indices such as CFI, TLI, RMSEA, and CMIN/DF.

The internal consistency of the measurement items was assessed using Cronbach's alpha (CA) in SPSS version 23. As noted by Pomegbe et al. (2020), a CA value of 0.7 or higher reflects acceptable internal consistency. As presented in the table 3, the analysis indicated strong internal consistency across the variables: Student Metacognitive Awareness (CA = .797), Student Mathematics Anxiety (CA = .851), and Mathematics Achievement (CA = .891). Since all CA values surpassed the recommended threshold of 0.7, the results confirm that the observed variables are reliably consistent.

4.4. Ethical Consideration

This study adhered to strict ethical standards throughout the research process. Prior to data collection, ethical clearance was obtained from the Akenten Appiah Menka University of Skills Training and Entrepreneurial Development (Graduate School) Ethical review committee with a

reference number AAMUSTED/IERC/2025/034. Informed consent was sought form all participants, and for minors, permission was obtained and participants were assured of anonymity, confidentiality, and their right to withdraw from the study at any stage without penalty. The data collected was securely stored and used sorely for academic purposes. No physical or psychological harm was caused to any participant, and the research upheld principles of respect, beneficence, and justice as outlined by the Belmont report and educational ethics guidelines (Cohen et al., 2018).

5. Results

5.1. Exploratory Factor Analysis

Exploratory Factor Analysis (EFA) was employed to examine the relationships between observed variables and their corresponding latent constructs. Table 2 presents the factor loadings for each observed variable on its respective latent factor. The suitability of the analysis was confirmed by a Kaiser-Meyer-Olkin (KMO) Measure of Sampling Adequacy of 0.851 and a determinant value of 6.792E-5. The KMO value indicates that 64.64% of the observed variables appropriately loaded onto their designated latent constructs. Additionally, Bartlett's Test of Sphericity yielded statistically significant results, with $\chi^2(190) = 2874.363$, $p < .001$, supporting the appropriateness of the dataset for factor analysis.

Table 2
Exploratory Factor Analysis of Measurement Items

	Rotated Component Matrix			
	Component			
	1	2	3	4
MCA1	.680			
MCA2	.650			
MCA3	.804			
MCA4	.827			
MCA5	.716			
SMA3		.789		
SMA4		.800		
SMA5		.811		
SMA6		.825		
SMA7		.665		
CRM3			.766	
CRM4			.866	
CRM5			864	
CRM6			.867	
CRM7			.801	
MA1				.776
MA2				.800
MA3				.781
MA5				.812
MA6				.807
KMO and Bartlett's Test				
TVE : .638%				
Kaiser–Meyer–Olkin measure of sampling adequacy = .851				
Bartlett's test of sphericity: χ^2 = 2874.363				
df = 190				
$p < .001$				
Determinant = 6.792×10^{-5}				

5.2. Confirmatory Factor Analysis

Confirmatory Factor Analysis (CFA) was carried out to validate the results of the Exploratory Factor Analysis (EFA) and to confirm the underlying measurement structure identified during the EFA phase. The CFA was executed using Amos version 23, following the approach used in earlier studies such as Dogbe et al. (2020), and was based on data from 309 respondents. The EFA, conducted using IBM SPSS version 23, served to determine the number of measurement items that met the minimum factor loading criterion of 0.5 and showed significant loadings on their respective latent variables (Asare, Yaribatuah, et al., 2024; Asare, Welcome, & Arthur, 2024; Marsh et al., 2020). This approach helps researchers determine which measurement items effectively represent each construct.

Convergent validity was assessed using average variance extracted (AVE) and composite reliability (CR). It refers to the degree to which indicators of the same construct are correlated (Trochim & Donnelly, 2001). All constructs exceeded the recommended thresholds of .50 for AVE and .70 for CR (Fornell & Larcker, 1981), with minimum values of .517 and .869, respectively. Model fit was evaluated against the criteria outlined by Hair et al. (2010): a close-fit test p value above .05, RMR and RMSEA values at or below .08, CMIN/DF below 3, and CFI and TLI values of .90 or greater. CFI and TLI assess improvement over a baseline model, whereas RMR and RMSEA assess residual discrepancies and approximation error. The interpretation of fit indices also depends on the estimation method and the characteristics of the data (Xia & Yang, 2019). As reported in Table 3, the model met the adopted fit criteria, while the AVE and CR values supported convergent validity. Figure 2 presents the measurement model, including the standardized factor loadings and correlations among the latent constructs.

Table 3
Confirmatory Factor Analysis and Measurement Model

Variables	*F. loadings*
MCA: CA = .797; AVE = .517 ; CR = .869	
MCA1: I always decide the best way to solve a problem.	.613
MCA2: I rely on my memory to remember the information I have learned.	.567
MCA3: I am aware of my strengths and weaknesses in mathematics.	.730
MCA4: I often ask myself how I can learn mathematics best.	.774
MCA5: I can develop my own strategies to learn mathematics.	.645
SMA: CA = .851; AVE = .537; CR = .907	
SMA3: For me, learning mathematics is fun.	.758
SMA4: I often worry that I will quickly forget everything I have learned.	.802
SMA5: I often do not feel comfortable when learning mathematics.	.765
SMA6: Mathematics is one of the courses I enjoy learning most.	.750
SMA7: I always want to solve mathematics problems.	.566
CRM: CA = .891; AVE = .609; CR = .931	
CRM3: My teacher always adopts student centered approach during lessons.	.706
CRM4: I understand mathematics most when classroom environment is conducive.	.863
CRM5: My mathematics teacher provides good feedback for better understanding.	.849
CRM6: My teacher always encourages me to learn mathematics.	.791
CRM7: My teacher always develops mathematical concepts systematically.	.674
MA: CA = .876; AVE = .562; CR = .918	
MA1: I learn mathematics concepts quickly.	.720
MA2: I feel accomplished upon completing a task in mathematics.	.739
MA3: I think learning mathematics will help me in daily life.	.772
MA5: Learning mathematics enhances my thinking ability.	.741
MA6: Learning mathematics enhances my analytical ability.	.784
Model fit index: CMIN/DF = 1.186; CMIN= 189.623; DF =160; CFI =.989; TLI =.987; IFI =.989; NFI=.935; RFI= .923; RMSEA =.025; RMR =.063; GFI =.942; P-close =1.00	

Figure 2
Confirmatory Factor Analysis Measurement Model

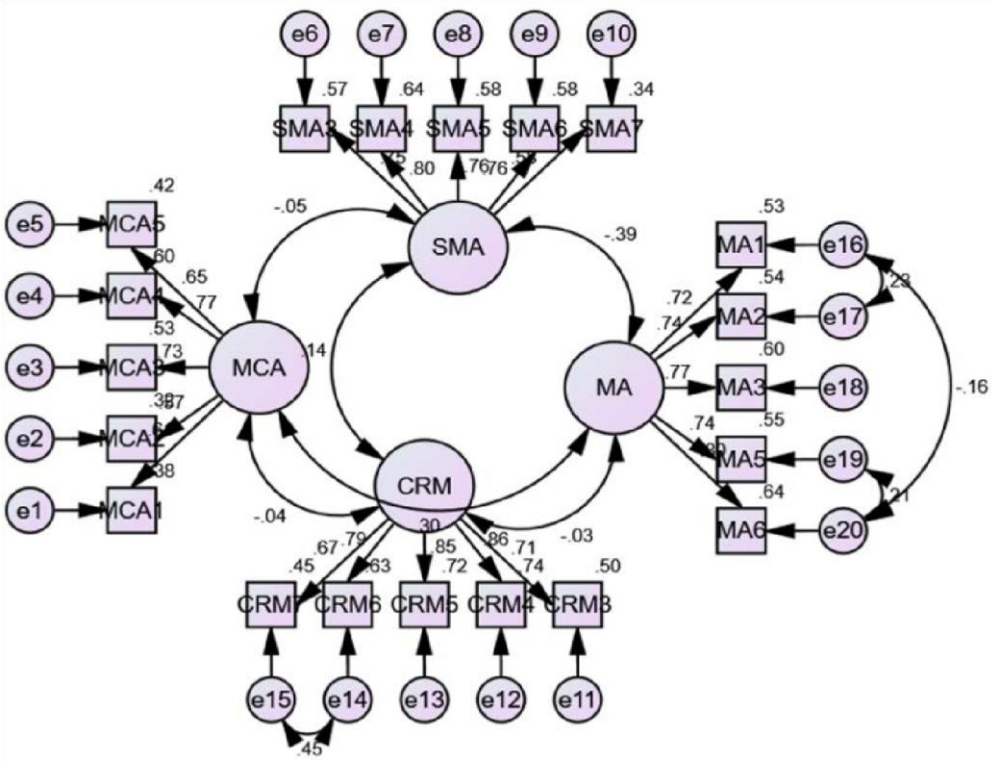

5.3. Analysis of Discriminant Validity

Although several methods exist for evaluating discriminant validity, this study adopted the Approach of comparing the square roots of the Average Variance Extracted (√AVEs) with the inter-construct correlation coefficients, following the procedure used in prior research such as Bamfo et al. (2018). To assess discriminant validity, the correlations between constructs were compared with the √AVE values for each construct. As noted by Fornell and Larcker (1981), discriminant validity is established when the highest inter-construct correlation is lower than the smallest √AVE. In this study, the lowest √AVE was 0.719, while the highest correlation coefficient observed was 0.296, as shown in Table 4. Based on Arthur et al. (2022) guideline stating that discriminant validity is confirmed when the smallest √AVE surpasses the highest correlation these findings affirm that the constructs are clearly differentiated, thereby confirming sufficient discriminant validity for the study.

Table 4
Discriminant Validity of the Study Constructs

Variables	*CR*	*AVE*	*MCA*	*SMA*	*CRM*	*MA*
MCA	.869	.517	***.719***			
SMA	.907	.537	.046	***.733***		
CRM	.931	.609	−.040	.138	***.780***	
MA	.918	.562	.296	−.397	−.027	***.750***

Note. Bold italic diagonal values are the square roots of average variance extracted (AVE). Off-diagonal values are interconstruct correlations.

5.4. Direct Effects

The results, as summarized in Table 5, revealed a positive direct relationship between students' mathematics performance and metacognitive awareness, which is in agreement with the first research objective (H1), which seeks to determine the effect of metacognitive awareness on students' mathematics achievement (estimate =.314; CR = 1.047). This indicates that students

demonstrated high metacognitive awareness and perform better in mathematics, with a $p > .05$, but the effect was statistically insignificant. The study also found that student metacognitive awareness has a direct negative influence on anxiety, however the effect is not statistically significant ($p > .05$, $\beta = -.052$; CR = −.547), suggesting that Mathematics anxiety can interfere with cognitive performance in a variety of ways. The investigation further found a substantial negative direct effect ($\beta = -.393$; CR = −1.591) between students' anxiety and their mathematics achievement.

Table 5
Structural Path Analysis of Direct and Moderating Effects

Direct Effect	*Standardized estimate*	*SE*	*CR*	*p*
MCA→MA	.314	.300	1.047	.156
MCA→SMA	−.052	.095	−.547	.061
SMA→MA	−.393	.245	−1.591	.008
CRM→MA	.032	.232	.138	.878
Moderating Effect	*Standardized estimate*	*SE*	*CR*	*p*
MCA_CRM→MA	−.049	.078	−.628	.870

Figure 3 presents the structural model and the standardized path coefficients among metacognitive awareness, mathematics anxiety, classroom management, and mathematics achievement.

Figure 3
Structural Path Model

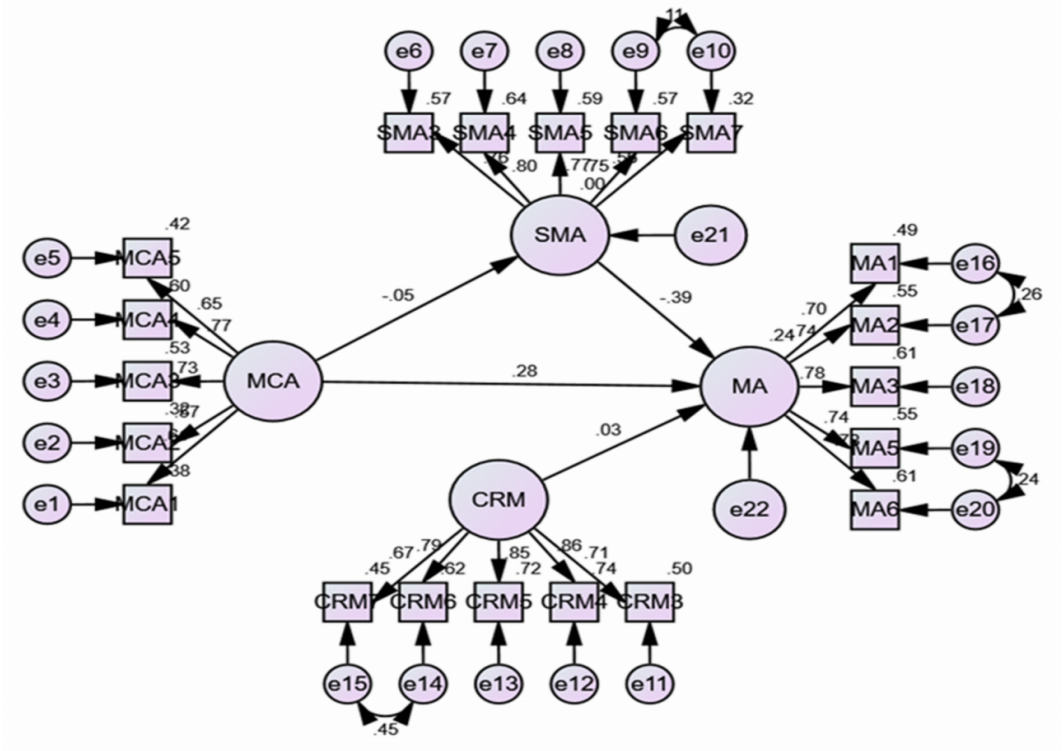

5.5. Moderation

The results from Figures 4 and 5 show that, there is a negative interaction between metacognitive awareness and classroom management on student mathematics achievement and is statistically insignificant with $p > .05$ ($\beta = -.049$, CR = −.628). Also, the results revealed from the graph that classroom management dampens students' awareness of their metacognitive, suggesting that the positive effect of metacognitive awareness on student performance decreases as classroom management becomes more effective. Similarly, from the interacting diagram, it demonstrated that, while both factors enhance mathematics achievement, effective classroom management may

decrease the additional benefit of metacognitive awareness on students' performance in mathematics. Apparently because students rely heavily on efficient classroom management than on their own independence and learning ability, good classroom management fosters a learning environment.

Figure 4
Moderating Effect of Classroom Management

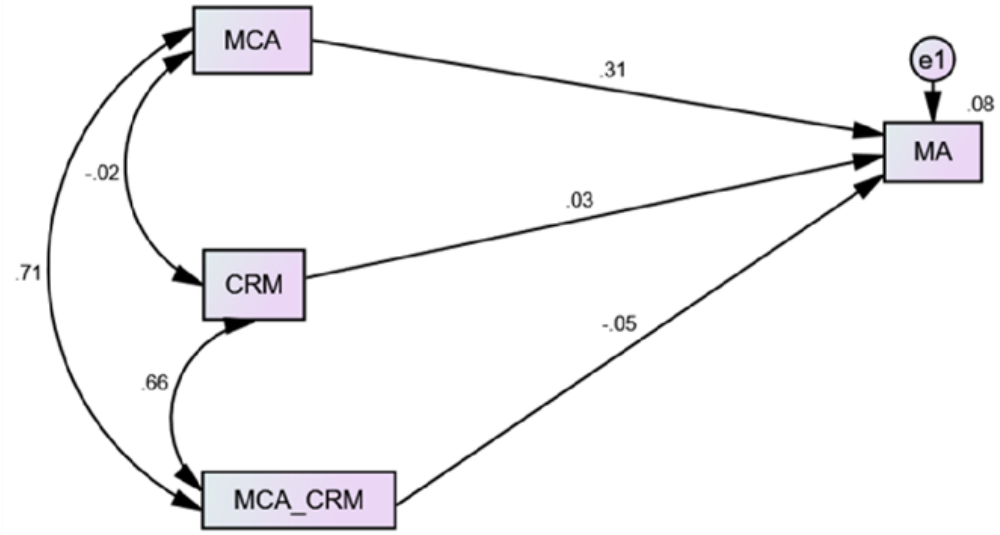

Figure 5
Interaction of Classroom Management and Metacognitive Awareness in Predicting Mathematics Achievement

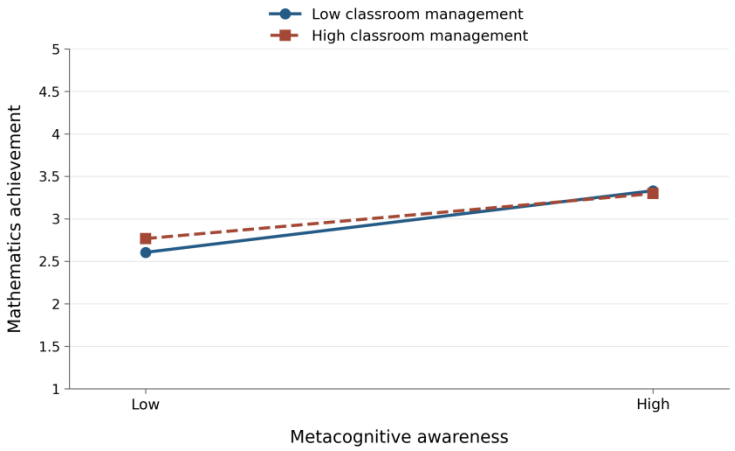

6. Discussion

This study examined the effect of metacognitive awareness on students' mathematics achievement. Table 5 presents the results of the data analysis conducted using Amos version 23, highlighting the direct effects illustrated in the structural path diagram. In line with the first research objective (H1), the findings revealed that metacognitive awareness positively influences students' mathematics achievement, although the relationship was not statistically significant. This suggests that students who consciously regulate and monitor their learning processes may perform better in mathematics. Students' academic achievement and their capacity to articulate their knowledge of a given issue are both impacted by their level of metacognitive awareness. The learning process depends on students' ability to express to teachers their level of comprehension (Erickson, 2015). Selecting and applying various cognitive strategies for learning, memory, reasoning, problem-solving, and thinking is a key aspect of effectively managing and controlling cognitive processes.

Likewise, the study elucidated that, student metacognitive Awareness has a direct negative effect on student anxiety and statistically insignificant with $p > .05$. There are several ways in which mathematics anxiety can impair cognitive function. Therefore, lowering arithmetic fear in the classroom is essential. To understand how to lessen math anxiety and ultimately be able to perform well on tests, interest and confidence in this area are crucial. Some researchers found that individuals with high degrees of mathematical anxiety tended to avoid mathematics because they felt they did not have the metacognitive skills (beliefs related to mathematics and control in performing) essential for solving mathematical tasks (Caponi et al., 2012).

The study further assessed the impact of students' anxiety on mathematics achievement, revealing a significant negative direct effect. While metacognitive awareness positively influences learning, mathematics anxiety adversely affects academic performance. According to Arem (2009), students with high levels of math anxiety often doubt their own abilities and exhibit reduced confidence when working with numbers or mathematical concepts. One effective classroom strategy to alleviate math anxiety is allowing students to articulate their anxious thoughts through writing (Smith-Nelson & Courtney, 2016). Whereas anxiety can hinder memory and information retrieval, students who apply metacognitive strategies are better able to recall and utilize prior knowledge when faced with challenging problems (Saricam & Ogurlu, 2015).

Research objective four (H4), the results of the study indicated that, metacognitive awareness of the student has a positive impact on student's mathematics achievement, which means that students who are more aware of their process of reasoning, regulation and learning strategies tend to perform better in their mathematics learning. Also, effective classroom management has positive influences on students' mathematics achievement. However, there is a negative interaction between metacognitive awareness and classroom management on student mathematics. Achievement and is statistically insignificant with $p > .05$, suggesting that the positive effect of metacognitive awareness on student performance decreases as classroom management becomes more effective. Similarly, while both factor enhance mathematics achievement, effective classroom management may decrease the additional benefit of metacognitive awareness on students' performance in mathematics. Possibly, because students depend more on the effective classroom management than on their own self-regulation and learning skills. Effective classroom management fosters a supportive environment for learning. Studies indicate that teachers who view classroom management as a way to create and sustain productive learning environments are generally more effective than those who concentrate mainly on discipline or authority (Brophy, 1982).

The positive relationship between metacognitive awareness and mathematics achievement may be explained by the ability of metacognitive aware students to plan, monitor, and evaluate their learning processes effectively. Students who consciously apply problem solving strategies are more likely to identify errors and adjust their approaches during mathematical tasks. This finding aligns with social cognitive and self-regulated learning theories, which emphasize the importance of learner autonomy in academic achievement.

The findings of this study contribute significantly to the field of mathematics education by emphasizing the interconnected roles of cognitive awareness, emotional experiences, and classroom practices in shaping students' mathematics achievement. The study extends existing educational psychology literature by demonstrating that effective learning outcomes are not solely dependent on instructional practices, but also on students' ability to regulate their own thinking processes and manage mathematics-related anxiety. These findings reinforce the importance of promoting supportive classroom environments that encourage both independent learning and emotional confidence in mathematics.

7. Conclusion

The study contributes to the field of mathematics education and educational psychology by providing empirical evidence on the relationships among metacognitive awareness, mathematics anxiety, classroom management, and students' mathematics achievement. The findings highlight

the importance of cognitive and emotional factors in influencing students' academic outcomes in mathematics. Although metacognitive awareness positively influenced mathematics achievement, the effect was not statistically significant, while mathematics anxiety negatively affected students' performance. Furthermore, the moderating role of classroom management suggests that highly structured classroom environments may reduce students' dependence on self-regulated learning strategies. The study therefore provides useful insights for educators, curriculum planners, and policymakers seeking to improve mathematics instruction and student learning experiences through balanced classroom management and metacognitive support strategies.

As previously noted, the two dimensions of mathematics anxiety significantly hinder students' performance in the subject (Caviola et al., 2017). The current study contributes to the existing literature by integrating factors such as metacognitive awareness and student's mathematics anxiety in the setting of mathematics achievement as well as classroom management serving as a novel moderating factor.

8. Suggestions

Mathematics teachers should consider incorporating metacognitive strategies, such as self-questioning, reflection, and problem-solving discussions, into classroom instruction to support students' regulation of their learning processes. Schools could also provide counseling and support programs that address mathematics anxiety through confidence-building activities and positive classroom engagement. Parents and educators should encourage independent learning habits that develop self-monitoring and self-regulation while providing appropriate guidance. These recommendations should be evaluated through intervention studies, as the present survey design does not establish their effectiveness.

Future research should investigate instructional and psychological interventions designed to reduce mathematics anxiety and strengthen metacognitive awareness. Although metacognitive awareness was positively associated with mathematics achievement, the relationship was not statistically significant and therefore does not support a definitive conclusion. Similarly, the negative interaction between classroom management and metacognitive awareness was not statistically significant, providing insufficient evidence that classroom management weakens this relationship. Further studies could examine whether these relationships vary according to age, gender, or classroom context. Research involving multiple institutions and more diverse samples would also help assess the generalizability of the findings beyond the single teacher training institution examined in this study.

Acknowledgements: The researchers would be thrilled to give thanks to the Department Head and the entire lecturers at the Department of Mathematics Education of AAMUSTED. Also, a very big thanks goes to the participants who contributed in diverse ways towards the success of this study.

Author contributions: Emmanuel Nteaka Bimbim: Conceptualization, Methodology, Investigation, Formal analysis, Data curation, Visualization, Writing – original draft, Writing – review & editing. Francis Ohene Boateng: Conceptualization, Methodology, Investigation, Formal analysis, Data curation, Visualization, Writing – original draft, Writing – review & editing. Ebenezer Appiagyei: Conceptualization, Methodology, Investigation, Formal analysis, Data curation, Visualization, Writing – original draft, Writing – review & editing.

Data availability statement: Data supporting the findings and conclusions are available upon request from the corresponding author.

Declaration of interest: The authors declare no competing financial or personal interests in this paper.

Ethics declaration: The study received ethical approval from the Research Ethics Committee of the Department of Mathematics Education at Akenten Appiah-Menka University of Skills Training and Entrepreneurial Development (AAMUSTED) under reference number

AAMUSTED/IERC/2025/034.

Funding: This research did not receive any specific grant from funding agencies in the public, commercial, or not-for-profit sectors.

References

Aboagye-Agbi, J. J., Apawu, J., Owusu-Ansah, N. A., & Mishiwo, M. (2025). Mathematical anxiety among senior high school (SHS) students in Agona West Municipality of Ghana. *Global Educational Research Journal, 13*(4), 115–126. https://springjournals.net/articles/pdf/231613052025

Arem, C. A. (2009). *Conquering math anxiety (3rd ed.)*. Cengage Learning.

Arthur, Y. D., Dogbe, C. S. K., & Asiedu-Addo, S. (2022). Modeling students' mathematics achievement and performance through teaching quality: SERVQUAL perspective. *Journal of Applied Research in Higher Education, 14*(4), 1509–1523. https://doi.org/10.1108/JARHE-06-2021-0243

Asare, B., Welcome, N. B., & Arthur, Y. D. (2024). Investigating the impact of classroom management, teacher quality, and mathematics interest on mathematics achievement. *Journal of Pedagogical Sociology and Psychology, 6*(2), 30–46. https://doi.org/10.33902/jpsp.202426232

Asare, B., Yaribatuah, P., Boateng, F. O., & Appiagyei, E. (2024). The role of teacher quality on students' mathematics interest: The facilitating effect of students' perception of mathematics. *Educational Point, 1*(1), Article e103. https://doi.org/10.71176/edup/14873

Ashcraft, M. H. (2002). Math anxiety: Personal, educational and cognitive consequences. *Current Directions in Psychological Science, 11*(5), 181–185.

Aydın, U., & Ubuz, B. (2010). Structural model of metacognition and knowledge of geometry. *Learning and Individual Differences, 20*(5), 436–445. https://doi.org/10.1016/j.lindif.2010.06.002

Bakar, R. (2018). The influence of professional teachers on Padang vocational school students' achievement. *Kasetsart Journal of Social Sciences, 39*(1), 67–72. https://doi.org/10.1016/j.kjss.2017.12.017

Bamfo, B. A., Dogbe, C. S. K., & Mingle, H. (2018). Abusive customer behaviour and frontline employee turnover intentions in the banking industry: The mediating role of employee satisfaction. *Cogent Business & Management, 5*(1), Article 1522753. https://doi.org/10.1080/23311975.2018.1522753

Bandura, A. (1977). *Social learning theory*. Prentice Hall.

Bedel, E. F. (2012). An examination of locus of control, epistemological beliefs and metacognitive awareness in preservice early childhood teachers. *Educational Sciences: Theory & Practice, 12*, 3051–3060.

Bornaa, C. S., Rahaman, H. A., & Iddrisu, A. B. (2023). Mathematics anxiety and academic performance of senior high school students in Sagnarigu Municipality, Ghana. *East African Journal of Education Studies, 6*(2), 323–342.

Brennan, M. K. (2017). *Innovations in assessing practice skills: Using social cognitive theory, technology, and self-reflection*. [Doctoral dissertation, St. Catherine University].

Brophy, J. (1982). *Classroom organization and management* (Occasional Paper No. 54). Institute for Research on Teaching, Michigan State University.

Bruce, D. (2016). Mathematics anxiety among Ghanaian students: A case study of students of Kinbu Senior High / Technical School, Accra and Hermann-Gmeiner SOS Junior High School, Tema. *Journal of Education and Practice, 7*(15), 75–83.

Caponi, B., Cornoldi, C., Falco, G., Focchiatti, R., & Lucangeli, D. (2012). *MeMa: Valutare la metacognizione, gli atteggiamenti negativi e l'ansia in matematica* [MeMa: Assessing metacognition, negative attitudes, and anxiety in mathematics]. Erickson.

Caviola, S., Primi, C., Chiesi, F., & Mammarella, I. C. (2017). Psychometric properties of the Abbreviated Math Anxiety Scale (AMAS) in Italian primary school children. *Learning and Individual Differences, 55*, 174–182. https://doi.org/10.1016/j.lindif.2017.03.006

Cipora, K., Santos, F. H., Kucian, K., & Dowker, A. (2022). Mathematics anxiety—Where are we and where shall we go? *Annals of the New York Academy of Sciences, 1513*(1), 10–20. https://doi.org/10.1111/nyas.14770

Cohen, L., Manion, L., & Morrison, K. (2018). *Research methods in education* (8th ed.). Routledge. https://doi.org/10.4324/9781315456539

Conley, D. (2014). *Learning strategies as metacognitive factors: A critical review*. Educational Policy Improvement Center.

Cook, E., Kennedy, E., & McGuire, S. Y. (2013). Effect of teaching metacognitive learning strategies on

performance in general chemistry courses. *Journal of Chemical Education, 90*(8), 961–967. https://doi.org/10.1021/ed300686h

Desoete, A., & De Craene, B. (2019). Metacognition and mathematics education: An overview. *ZDM Mathematics Education, 51*(4), 565–575. https://doi.org/10.1007/s11858-019-01060-w

Devine, A., Fawcett, K., Szucs, D., & Dowker, A. (2012). Gender differences in mathematics anxiety and the relation to mathematics performance while controlling for test anxiety. *Behavioral and Brain Functions, 8*, 1–9. https://doi.org/10.1186/1744-9081-8-33

Dogbe, C. S. K., Tian, H., Pomegbe, W. W. K., Sarsah, S. A., & Otoo, C. O. A. (2020). Effect of network embeddedness on innovation performance of small and medium-sized enterprises: The moderating role of innovation openness. *Journal of Strategy and Management, 13*(2), 181–197. https://doi.org/10.1108/JSMA-07-2019-0126

Dogbe, C. S. K., Tian, H., Pomegbe, W. W. K., Sarsah, S. A., & Otoo, C. O. A. (2020). Effect of network embeddedness on innovation performance of small and medium-sized enterprises. *Journal of Strategy and Management, 13*(2), 181–197. https://doi.org/10.1108/JSMA-07-2019-0126

Drew, C. (2020). 13 examples of metacognitive strategies. Helpful Professor. https://helpfulprofessor.com/metacognitive-strategies

Erickson, S. L. (2015). *Math anxiety and metacognition in mathematics education*. [Doctoral dissertation, University of California, Merced]. https://escholarship.org/uc/item/26w5j72t

Essuman, S. A., Nyarko, J., & Frimpong, K. (2021). Impact of mathematics anxiety on the academic performance of junior high school pupils in the Bongo District of Ghana. *International Journal of Social Sciences and Humanities Invention, 8*, 6562–6569.

Ferdous, F. (2012). A case study of first-year non-English undergraduate students' English learning anxiety in Bangladesh. *Journal of Education and Practice, 3*(9), 1–11.

Fitzgerald, B. (1997). The use of systems development methodologies in practice: A field study. *Information Systems Journal, 7*(3), 201–212. https://doi.org/10.1046/j.1365-2575.1997.d01-18.x

Flavell, J. H. (1976). Metacognitive aspects of problem solving. In L. B. Resnick (Ed.), The nature of intelligence (pp. 231–235). Erlbaum.

Fornell, C., & Larcker, D. F. (1981). Evaluating structural equation models with unobservable variables and measurement error. *Journal of Marketing Research, 18*(1), 39–50. https://doi.org/10.1177/002224378101800104

Fornell, C., & Larcker, D. F. (1981). Evaluating structural equation models with unobservable variables and measurement error. *Journal of Marketing Research, 18*(1), 39–50. https://doi.org/10.1177/002224378101800104

Hair, J. F., Black, W. C., Babin, B. J., & Anderson, R. E. (2010). *Multivariate data analysis: A global perspective (7th ed.)*. Pearson Education.

Hochweber, J., Hosenfeld, I., & Klieme, E. (2014). Classroom composition, classroom management, and the relationship between student attributes and grades. Journal of Educational Psychology, 106(1), 289–300. https://doi.org/10.1037/a0033829

Incik, E. Y. (2020). Öğretmenlerin yaşam boyu öğrenme eğilimleri ve 21. *yüzyıl öğreten becerileri arasındaki ilişkinin incelenmesi. Bolu Abant İzzet Baysal Üniversitesi Eğitim Fakültesi Dergisi, 20*(2), 1099–1112. https://doi.org/10.17240/aibuefd.2020-638602

Jaafar, W. M. W., & Ayub, A. F. M. (2010). Mathematics self-efficacy and meta-cognition among university students. *Procedia - Social and Behavioral Sciences, 8*, 519–524. https://doi.org/10.1016/j.sbspro.2010.12.071

Jacobse, A. E., & Harskamp, E. G. (2012). Towards efficient measurement of metacognition in mathematical problem solving. *Metacognition and Learning, 7*(2), 133–149. https://doi.org/10.1007/s11409-012-9088-x

Khatoon, T., & Mahmood, S. (2010). Mathematics anxiety among secondary school students in India and its relationship to achievement in mathematics. *European Journal of Social Sciences, 16*(1), 75–86.

Kohen, Z., & Nitzan, O. (2022). Excellence in mathematics in secondary school and choosing and excelling in STEM professions over significant periods in life. *International Journal of Science and Mathematics Education, 20*(1), 169–191. https://doi.org/10.1007/s10763-020-10138-x

Koomson, D., Boateng, F. O., & Lotey, E. K. (2024). Investigating the level of mathematics anxiety among junior high school pupils. *Mathematics Education Journal, 8*(2), 147–158. https://doi.org/10.22219/mej.v8i2.33693

Marsh, H. W., Guo, J., Dicke, T., Parker, P. D., & Craven, R. G. (2020). Confirmatory factor analysis (CFA), exploratory structural equation modeling (ESEM), and set-ESEM: Optimal balance between goodness of fit and parsimony. *Multivariate Behavioral Research, 55*(1), 102–119. https://doi.org/10.1080/00273171.2019.1602503

Nabavi, R. T., & Bijandi, M. S. (2012). *Bandura's social learning theory & social cognitive learning theory* [Manuscript]. ResearchGate. https://www.researchgate.net/publication/267750204

Nisar, M., Khan, I. A., & Khan, F. (2019). Relationship between classroom management and students' academic achievement. *Pakistan Journal of Distance & Online Learning, 5*(1), 209–220. https://files.eric.ed.gov/fulltext/EJ1266806.pdf

Olaya, M. L., & González-González, G. M. E. (2020). Cooperative learning projects to foster reading skills. *GIST – Education and Learning Research Journal, 21*, 119–139. https://doi.org/10.26817/16925777.835

Pan, T. S., Khin, H. N., & Aung, A. A. (2020). Metacognitive awareness and mathematics anxiety of grade 10 students in Meikhtila Township. *Journal of the Myanmar Academy of Arts and Science, 18*(9B), 545–554. https://meral.edu.mm/records/5731

Pekrun, R., & Perry, R. P. (2014). Control-value theory of achievement emotions. In R. Pekrun & L. Linnenbrink-Garcia (Eds.), *International handbook of emotions in education* (pp. 120–141). Routledge.

Pennequin, V., Sorel, O., Nanty, I., & Fontaine, R. (2010). Metacognition and low achievement in mathematics: The effect of training in the use of metacognitive skills to solve mathematical word problems. *Thinking & Reasoning, 16*(3), 198–220. https://doi.org/10.1080/13546783.2010.509052

Pomegbe, W. W. K., Dogbe, C. S. K., Tian, H., & Sarsah, S. A. (2020). Effect of network embeddedness on innovation performance of small and medium-sized enterprises. Journal of Strategy and Management. https://doi.org/10.1108/JSMA-07-2019-0126

Radmehr, F., & Drake, M. (2020). Exploring students' metacognitive knowledge: The case of integral calculus. *Education Sciences, 10*(3), Article 55. https://doi.org/10.3390/educsci10030055

Rayner, G., & Papakonstantinou, T. (2018). The use of peer-assisted learning to enhance foundation biology students' understanding of evolution. *International Journal of Innovation in Science and Mathematics Education, 26*(3), 65–77.

Ristanto, R. H., Lestari, P., & Miarsyah, M. (2019). Analysis of conceptual understanding of botany and metacognitive skill in pre-service biology teacher in Jakarta, Indonesia. *Journal for the Education of Gifted Young Scientists, 7*(2), 199–214. https://doi.org/10.17478/jegys.515978

Roick, J., & Ringeisen, T. (2018). Students' math performance in higher education: Examining the role of self-regulated learning and self-efficacy. *Learning and Individual Differences, 65*, 148–158. https://doi.org/10.1016/j.lindif.2018.05.018

Saricam, H., & Ogurlu, U. (2015). Metacognitive awareness and math anxiety in gifted students. *Cypriot Journal of Educational Sciences, 10*(4), 338–348. https://doi.org/10.18844/cjes.v10i4.151

Schofield, L. (2012). Why didn't I think of that? Teachers' influence on students' metacognitive knowledge of how to help students acquire metacognitive abilities. *Kairaranga, 13*(1), 56–62.

Silaj, K., Schwartz, S., Siegel, A., & Castel, A. (2021). Test anxiety and metacognitive performance in the classroom. *Educational Psychology Review, 33*(4), 1809–1834. https://doi.org/10.1007/s10648-021-09598-6

Smith-Nelson, C. K. (2016). *Practicing positive coping strategies for managing math anxiety in a secondary mathematics classroom* [Master's thesis, Missouri State University]. BearWorks. https://bearworks.missouristate.edu/theses/2977/

Suren, N., & Kandemir, M. A. (2020). The effects of mathematics anxiety and motivation on students' mathematics achievement. *International Journal of Education in Mathematics, Science and Technology, 8*(3), 190–218. https://doi.org/10.46328/ijemst.v8i3.926

Tamsyani, W. (2016). Pengaruh model pembelajaran dan kesadaran metakognitif terhadap hasil belajar peserta didik SMA dalam materi pokok asam basa [The effect of learning models and metacognitive awareness on high school students' learning outcomes in acids and bases]. *Journal of Educational Science and Technology (EST), 2*(1), 10–25. https://doi.org/10.26858/est.v2i1.1887

Thomson, S., De Bortoli, L., & Underwood, C. (2017). PISA 2015: Reporting Australia's results. Australian Council for Educational Research. https://research.acer.edu.au/ozpisa/22/

Trochim, W. M., & Donnelly, J. P. (2001). *Research methods knowledge base* (Vol. 2). Atomic Dog Publishers.

Tuncer, M., & Dogan, Y. (2016). Relationships among foreign language anxiety, academic self-efficacy beliefs, and metacognitive awareness: A structural equation modelling. *International Journal of Learning and Development, 6*, 31–41.

Wang, Y. (2019). Study of metacognitive strategies' impacts on C language programming instruction. In Proceedings of the 2nd International Conference on Contemporary Education, Social Sciences and Ecological Studies (CESSES 2019) (pp. 112–116). Atlantis Press. https://doi.org/10.2991/cesses.19.2019.27

Xia, Y., & Yang, Y. (2019). RMSEA, CFI, and TLI in structural equation modeling with ordered categorical data: The story they tell depends on the estimation methods. *Behavior Research Methods, 51*(1), 409–428. https://doi.org/10.3758/s13428-018-1055-2